THE AT-A-GLANCE

Remote Reading Gauge

The Only All Mechanical Remote Reading Gauge

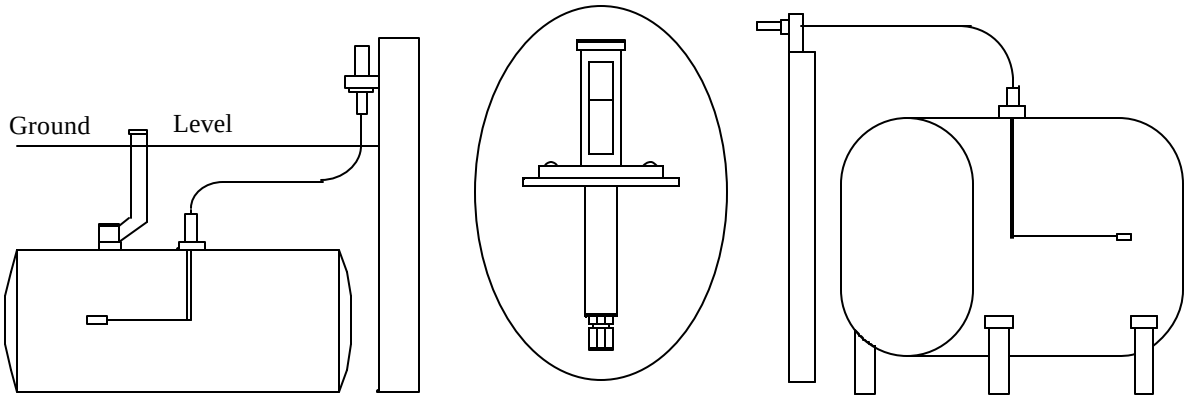

Direct mechanical action eliminates potential failure due to electrical or pneumatic connections. Its accuracy is unaffected by changes in the specific gravity of oil.

Please specify exact tank depth and distance from tank that remote indicator will be located.

- Cast aluminum indicator is weather resistant and almost indestructable.
- All “internal tank” parts available in stainless steel.
- Can be used for above ground tanks.
- Can mount indicator below an above ground tank.

DU Remote Reading Gauge package includes:

- One tank and float assembly with 2” tank fitting.
- Three 4’ lengths (12’ total) copper remote tube with splicing fittings.
- One stainless steel bead chain.
- One remote indicator.
- One wall bracket

KRUEGER SENTRY GAUGE

KRUEGER SENTRY GAUGE CO. INC.
1873 Siesta Lane: Green Bay, WI 54313-8021
Phone:(920) 434-8860 : Fax (920) 434-8897
Office Hours: 7:00 A.M. to 5:00 P.M. (CST)
http://www.kruegersentrygauge.com

KRUEGER SENTRY GAUGE

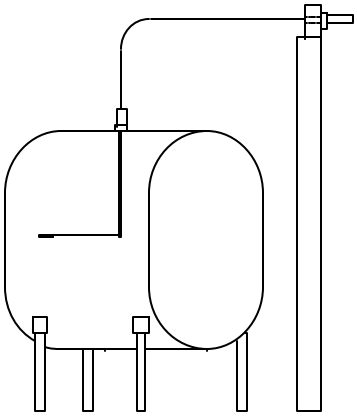

Fig. 1
DU-Outside installation

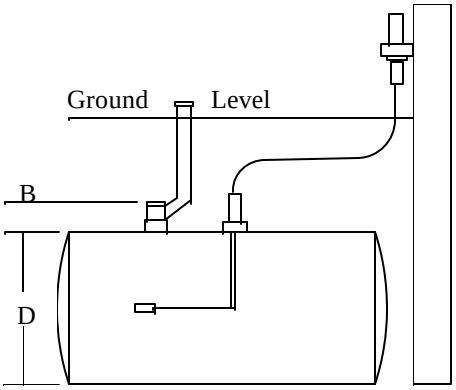

Fig.2
DU - Underground Installation

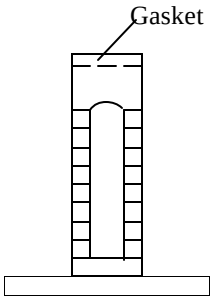

Fig.3

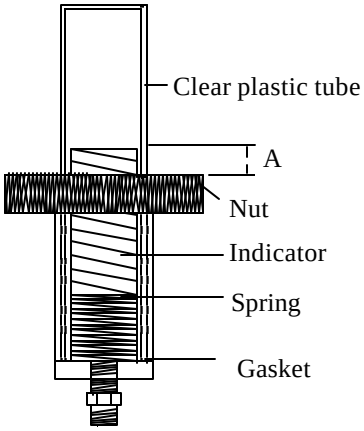

Fig.4

CAUTION - If it is necessary to cut tubing be sure burs are removed before splicing

TYPE DU REMOTE READING GAUGE:
INSTRUCTIONS FOR BASEMENT INSTALLATION:

1. Vertical tanks, horizontal tanks, or round tanks that are empty or completely full, just drop assembly into threaded tank opening and screw down threaded bushing. Be sure that the corner of hexagon bushing showing arrow points to center of long end of tank. Be sure bushing is properly seated in tank flange before tightening with wrench. If tank is partially full, completely fill tank or completely empty tank before installing DU gauge.
2. After gauge is installed in tank, locate the position for the outside reading indicator and wall bracket, then attach wall bracket with screws.
3. Find location for hole for copper tubing and beaded chain. (Preferably in the sill between joists) drill or cut 5/8" diameter hole or 1" hole if gauge is to be side mounted. (Fig. 1)
4. Measure length of tubing required making necessary bends. Bends should be uniform with not less than 5" radius.
5. Thread stainless beaded chain through copper tube, start threading from gauge. Run beaded chain and tubing through hole up to wall bracket.
6. Remove nut fastening housing (Fig. 3&4) together. Set housing in bracket, place spring in housing (Fig.4). Next thread chain through spring and through red indicator tube. Have closed end (with chain connector) toward outside of building. This tube should be set with line showing on the tube even with outside of housing (A Fig. 4) . This applies if tank is empty.
7. Slide transparent plastic tube over red indicator tube and spring, and press the same end of housing (Fig. 4) over transparent plastic tube. Check to see that reading is correct.
8. If reading is incorrect re-adjust chain. Then cut off chain even with the end of the red indicator tube. Fasten chain connector. Fasten outside housing (Fig. 3) to inside housing (Fig. 4) with nut.

TYPE DU REMOTE READING GAUGE
INSTALLATION INSTRUCTIONS FOR UNDERGROUND TANKS

For underground tanks (Fig.2). The above instructions for installation are the same.
If there are not enough openings in underground tank, installation can be made as shown in Fig.2 by using a Y fitting on fill pipe or vent pipe. Opening must be 2". When ordering gauges for such installations, it is necessary to give dimension B (Fig. 2) from inside of top of tank to top of Y fitting, and also dimension of diameter of tank. Lower portion of indicator housing is threaded to attach a 1/8" pipe.

KRUEGER SENTRY GAUGE

KRUEGER SENTRY GAUGE CO. INC.
1873 Siesta Lane, Green Bay, WI 54313-8021
Phone:(920) 434-8860 Fax (920) 434-8897
Office Hours: 7:00 A.M. to 5:00 P.M. (CST)
http://www.kruegersentrygauge.com