The Direct Reading Gauge Gauge -Type D Spec Sheet

Component:	Description
Calibration:	Consists of 3 pieces. Inner piece, outer piece, and a calibrated piece of paper in between them. Optional: Inner plastic piece can be glass. This helps protect from aggressive fumes and heat.
Gasket:	Seals the gauge to the bushing. Standard material is Duro Nitrile. Optional: Gasket can be made out of Viton
Bushing:	NPT male fitting that threads into your tank's female fitting. Standard material is Aluminum. Optional: PVC available. Standard size is 2 inch. Optional 1.5 inch or .75 inch are available.
Locknut	Red plastic locking nut tightens the calibration and the gauge to the bushing. Standard material is HDPE. Optional: Can be made of Aluminum or PVC for added durability.
Standard Rod:	Stationary 3/16" rod inside the tank, stabilizes the gauge. Length varies depending on tank depths and extensions. Standard material is Galvanized Steel. Also available in stainless steel, Peek Plastic, or Kynar Plastic
Push Rod:	Mobile 1/8" rod inside the tank, moves the red indicator up and down vertically. Length varies depending on tank depths and extensions. Standard material is Galvanized Steel. Also available in stainless steel, Peek Plastic, or Kynar Plastic.
Float Rod:	Mobile flat rod inside the tank, moves the push rod up and down vertically. Length varies depending on tank depths and extensions. Standard material is Galvanized Steel. Also available in stainless steel, Peek Plastic, or Kynar Plastic.
Float:	Attached to the float rod inside the tank. Floats on top of the liquid. Standard material is HDPE Plastic. Also available in nitrophyll or stainless steel.

Sample Part Number - D-2-48

D is the gauge type. 2 is the fitting size. 48 is the tank depth. In this example there is no extension.

When custom ordering Direct Reading gauges:

- Specify type D.
- Specify Size opening.
- Specify tank depth.
- Specify extension length. (may be zero)
- Specify non standard materials and options.

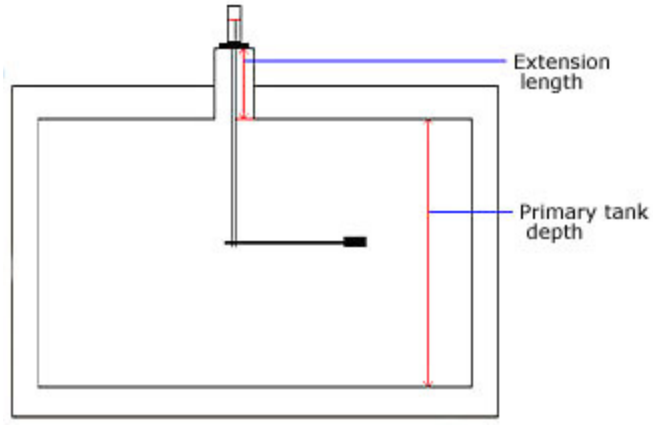

Krueger Sentry Gauge
1873 Siesta Lane
Green Bay, WI 54313

www.ksentry.com

Contact us for more info
Ph: 920-434-8860
Fax: 920-434-8897

Email: info@ksentry.com